BrahMos

An India Russia Joint Venture

BrahMos Aerospace
Post-Dulania, Pilani
District-Jhunjhunu
Rajasthan-333031, INDIA
Tele Fax: 01596-275803

REQUEST FOR PROPOSAL (RFP)

RFP No.: BAPL/Pilani/ABS/01 RFP Date: 12 Nov 25

REQUEST FOR SUBMISSION OF TECHNO-COMMERCIAL & PRICE BID FOR PROCUREMENT AND INSTALLATION OF AIR BLOWING SYSTEM AND PERMANENT PIPELINES WITH AUXILIARY SYSTEMS IN INTEGRATION HANGAR AT BAPL, PILANI

Dear Sir/ Madam,

1. BrahMos Aerospace Private Limited, hereinafter referred to as **Buyer**, intends to procure and install Air Blowing System and Permanent Pipeline in Integration hangar at BAPL, Pilani and seek participation in the procurement process from prospective Bidders subject to requirements of succeeding paragraphs.

2. This RFP is divided into 7 Parts as follows:

PART I	:	General Information & Instructions for the Bidders
PART II	:	Scope of Work
PART III	:	Evaluation Criteria of Bids
PART IV	:	Special Terms & Conditions of RFP
PART V	:	Standard Terms & Conditions of RFP
PART VI	:	Format for Price Bids
PART VII	:	Compliance Statement

3. This RFP is neither an agreement and nor an offer by Buyer to the prospective Bidders or any other person. The purpose of this RFP is to provide interested parties with information that may be useful to them in submitting their proposals pursuant to this RFP. This RFP includes statements, which reflect various assumptions and assessments arrived at by Buyer in relation to the Project. This RFP document and any assumptions, assessments and statements made herein do not purport to contain all the information that each Bidder may require. The Bidder shall bear all its costs associated with or relating to the preparation and submission of proposal pursuant to this RFP. Wherever necessary, Buyer reserves the right to amend or supplement the information, assessment or assumptions contained in this RFP. Buyer reserves the right to withdraw the RFP or foreclose the procurement case at any stage. The issuance of this RFP does not imply that Buyer is bound to shortlist a Bidder for the Project. Buyer also reserves the right to disqualify any Bidder should it be so necessary at any stage on grounds of National Security.

4. The receipt of the RFP may please be acknowledged.

Thanking you.

FOR BrahMos Aerospace Private Limited

(Authorized Signatory)

PART-I: GENERAL INFORMATION AND INSTRUCTIONS FOR THE BIDDERS

(The terms & conditions will be amended or additional terms & conditions, if required, will be included in the RFP as decided by the competent authority)

5. The salient aspects and timelines of the acquisition are tabulated below. In case of any variation in the details furnished below or in any Annexures(s) with that mentioned in the RFP, information furnished in the main body of the RFP at referred Paragraph is to be followed.

(a) The address and contact numbers for sending Bids is given below:

Bids to be addressed to:	Abhishek Panigrahi (AGM, Commercial)
Postal address for sending the Bids	BrahMos Aerospace Pvt Ltd 16, Cariappa Marg, Kirby Place, Delhi Cantt, New Delhi-110010 **(Referred as Buyer)**
Contact Nos. & E-mail	Tel: 011-42285101, 011-42285103 Fax: 011-42285129 Email: contracts@brahmos.com

(b) **LAST DATE AND TIME FOR DEPOSITING THE BIDS:** The sealed Bids under ***Two-Bid system (combined Techno-Commercial Bid & Price Bid)*** should reach at the above given address through post/in person latest by ***10 Dec 25*** The responsibility to ensure this lies with the Bidder. **Early submission of the Bids is acceptable to the Buyer. E-mail quotes shall not be entertained and rejected.**

(c) **FORWARDING OF BIDS:** Bids shall be forwarded by the Bidder under their original memo/letter pad inter alia furnishing details like GST number, Bank address with EFT Account, if applicable, etc. and complete postal & e-mail address of their office. The Techno-Commercial and the Price Bids should be put in two separate envelops and then be put in a single envelope with the **'Bidder Details, RFP No., Last Submission Date'** pasted on top.

(d) **PRE-BID CLARIFICATION:**

(i) Prior to preparation of the Techno-Commercial Bid, clarifications regarding the technical and Commercial Terms & Conditions be obtained from **Mr. Abhishek Jain, Additional General Manager (Pilani)**, BRAHMOS Complex, Pilani, Mobile: +91 9871393191 within 10 working days from the date of publication of RFP.

(ii) Un-willingness of the Bidder to participate in Bid may be communicated to **Mr. Abhishek Jain, Additional General Manager (Pilani)**, BRAHMOS Complex, Pilani, Mobile: +91 9871393191 within 10 working of receipt of RFP.

(e) **CLARIFICATION REGARDING CONTENTS OF THE BIDS:** During evaluation and comparison of Bids, the Buyer may, at its discretion, ask the Bidder for clarification of his Bids. The request for clarification will be given in writing and no change in prices or

substance of the Bids will be sought, offered or permitted. No post-Bid clarification on the initiative of the Bidder will be entertained.

(f) **CONDITIONS UNDER WHICH THIS RFP IS ISSUED:** This RFP is being issued with no financial commitment. The Buyer reserves the right to withdraw the RFP and change or vary any part thereof or foreclose the procurement case at any stage. The Buyer also reserves the right to disqualify the Bidder, should it be so necessary at any stage.

(g) **VALIDITY OF BIDS:** The Bids should remain valid till 4 months from the last date of submission of the Bids.

BrahMos

An India Russia Joint Venture

BrahMos Aerospace
Post-Dulania, Pilani
District-Jhunjhunu
Rajasthan-333031, INDIA
Tele Fax: 01596-275803

PART-II: SCOPE OF WORK

(The terms & conditions will be amended or additional terms & conditions, if required, will be included in the RFP as decided by the competent authority)

6. Scope of Work is defined in **Appendix-A**, this section will include the following:

(a) Detailed list of items with quantities / complete scope of work as finalized by the Indenting Department.

(b) Technical Specifications with Document references

(c) All technical details e.g. Bill of Materials (BOM) QA procedure, Quality parameters etc.

BrahMos

An India Russia Joint Venture

BrahMos Aerospace
Post-Dulania, Pilani
District-Jhunjhunu
Rajasthan-333031, INDIA
Tele Fax: 01596-275803

PART-III: EVALUATION CRITERIA OF BIDS

(The terms & conditions will be amended or additional terms & conditions, if required, will be included in the RFP as decided by the competent authority)

7. The Bidder is required to submit detailed Techno-Commercial Bid containing all Terms & Conditions as enumerated at Part II, Part III, Part IV, Part V, Part VI and Part VII of this RFP and give confirmation of their acceptance of all Terms & Conditions which will automatically be considered as part of the Contract concluded with the successful Bidder (i.e., Seller in the Contract) as selected by the Buyer. The deviations, if any, may be clearly indicated in the Techno-Commercial Bid along with the Compliance Statement in the format enclosed at Part-VII. Failure to do so may result in rejection of Bid submitted by the Bidder.

8. Only those Bids will be evaluated, which are found to be fulfilling all the eligibility and qualifying requirements of the RFP, both technically and commercially. The bidder, whose price is arrived as lowest as per Evaluation criteria given in this Appendix, will be declared as L-1 bidder by Buyer.

9. **EVALUATION OF TECHNO-COMMERCIAL BID:** The Techno-Commercial Bid forwarded by the Bidders will be evaluated by a Techno-Commercial Evaluation Committee (TCEC) to confirm that the items being offered meet the requirement. The TCEC will examine the extent of variations/differences, if any, in the technical characteristics of the items offered by Bidder. The Bidder, if required, may also be called for the TCEC meeting for clarification on the Techno-Commercial Bid submitted by them.

10. **EVALUATION OF PRICE BID:**

(a) The Price Bids of only those Bidders will be opened and evaluated, whose technical bids have been cleared by TCEC. The unopened Price Bids will be returned back to the Bidders by the Buyer on request by the Bidders. The Price Bids will be evaluated on the basis of complete scope and not individual line-item wise basis.

(b) If there is a discrepancy between the unit price and the total price that is obtained by multiplying the unit price and quantity, the unit price shall prevail and the total price shall be corrected.

(c) If there is a discrepancy between words and figures, the amount mentioned in words shall prevail.

11. **PROCEDURE FOR COST COMPARISON:** The basis for comparison of cost in different situations would be as follows:

(a) The financial bids of the qualified bidders will be compared on the basis of price quoted in the price bid format of the RFP/Bid document.

(b) If the competition is only among Indian bidders, the financial comparison should be considered on the basis of FOR destination prices excluding statutory levies, taxes and duties payable on final product.

(c) If the competition is among Indian and foreign bidders, the CIP/CIF cost quoted by the foreign bidders at destination port will be basis of comparison with the basic cost (FOR destination basis) offered by Indian bidders excluding statutory levies, taxes and duties payable on final product.

(d) If competition is only among foreign bidders, the basis for comparison should be the CIF/CIP price (designated port). If CIF/CIP price is not available, additional 10% of FCA/FOB cost over and above quoted FCA/FOB cost to be loaded for comparison purpose only.

(e) In import cases, all the foreign quotes will be brought to a common denomination in Indian Rupees by adopting the exchange rate as BC selling rate of the State Bank of India on the date of the opening of Price Bids.

PART-IV: SPECIAL TERMS & CONDITIONS OF RFP

(The terms & conditions will be amended or additional terms & conditions, if required, will be included in the RFP as decided by the competent authority)

The Bidder is required to give confirmation of their acceptance of Special Terms and Conditions of the RFP mentioned below which will automatically be considered as part of the Contract concluded with the successful Bidder as selected by the Buyer. Failure to do so may result in rejection of Bid submitted by the Bidder.

12. APPORTIONMENT OF QUANTITY: NA

13. BANK GUARANTEE / INDEMNITY BOND: A BG from an Indian nationalized bank OR Axis/HDFC/ICICI/Kotak Bank for 10% of the P.O value valid up to the entire delivery period plus claim period of 03 (Three) months.

14. OPTION CLAUSE: The Contract will have an Option Clause, wherein the Buyer can exercise an option to procure an additional quantity up to 100% of the original contracted quantity in accordance with the same terms and conditions of the Contract. This will be applicable within the currency of the Contract or as decided during commercial negotiations. It will be entirely the discretion of the Buyer to exercise this option or not.

15. REPEAT ORDER CLAUSE: The Contract will have a Repeat Order Clause, wherein the Buyer can order for additional quantity up to a maximum of up to 100%, including order placed under Option Clause, of the originally contracted quantity of the original contracted quantity under the Contract within six months from the date of successful supply/successful completion of this contract. The Repeat Order will have rates on not exceeding basis (excluding taxes and duties) while the terms and conditions will remain unchanged. It will be entirely the discretion of the Buyer to exercise the Repeat order or not.

16. TOLERANCE CLAUSE: NA

17. INTELLECTUAL PROPERTY RIGHT (IPR): The rights of Intellectual Property developed under the Contract will be either the property of the Buyer or jointly owned by Buyer and the Seller. The holding of rights of intellectual property will be decided by the Buyer based on the

merits of the case. Even where the IPR is jointly held, Buyer will have the marching rights on IPR i.e. the Seller will have to give technical know-how/ design data for production of the item to the designated Agency nominated by Buyer. The Seller will, however, be entitled to license fee/ royalty from the Agency as per agreed terms and conditions. The Seller will also be entitled to use these intellectual properties for their own purpose, which specifically excludes sale or licensing to any third party.

18. **PURCHASE PREFERENCE CLAUSE:** Purchase preference will be granted as per Public Procurement (Preference to Make in India), Order – 2017 as amended, issued by DPIIT/Ministry of Commerce and Industry.

19. **TRANSFER OF TECHNOLOGY (TOT):** NA

20. **PERMISSIBLE TIME FRAME FOR SUBMISSION OF INVOICE:** To claim payment (part or full), the Seller shall submit the bill(s) along with the relevant documents within 15 days from the completion of the activity/ supply and installation.

21. **PAYMENT TERMS:** The payment terms should be in accordance with the RFP as any change of payment terms specified in the RFP can alter L-1 determination. In case where the payment terms offered by the bidders differ from the options given in the RFP, DCF technique may be utilized for L-1 determination.

    (a) **ADVANCE PAYMENT:** NA

    (b) **STAGE PAYMENTS:** 100% Payment after Delivery and Acceptance of goods at BrahMos Aerospace, Pilani.

22. **RECOVERY OF ADVANCE CLAUSE:** NA

23. **INVOICE PREPARATION:** All original documents for payments including invoices are to be raised on and submitted to the Buyer's location at PILANI.

24. **EXCHANGE RATE VARIATION CLAUSE (IF APPLICABLE):** This clause will be applicable only in case the delivery period exceeds 12 Months from the Effective Date of the Contract which involves import content (foreign exchange).

    (a) Detailed time schedule for procurement of imported material and their value at the FE rates adopted for the Contract is to be furnished by the Bidder as per the format given below.

Year Wise and Major Currency Wise Import Content Break up

Year	Total Cost of Material (Import)	FE Content Outflow			
		$	€	£	OTHERS

(b) ERV will be payable/ refundable depending upon movement of exchange rate with reference to exchange rate adopted for the valuation of the Contract. Base Exchange rate of each major currency used for calculating FE content of the Contract will be the (Name of Bank & branch) selling rate of the foreign exchange element on the date of the last date of bid submission.

(c) The base date for ERV would be the last date of bid submission and variation on the base date will be given up to the midpoint of manufacture unless the Bidder indicates the time schedule within which material will be imported by them. Based on information given above, the cut-off date/dates within the Delivery schedule for the imported material will be fixed for admissibility of ERV.

(d) ERV clause will not be applicable under following circumstances:

(i) Cases where delivery periods for imported content are subsequently to be re-fixed /extended except for reasons solely attributable to the Buyer or Force Majeure.

(ii) Cases where movement of exchange rate falls within the limit of ± 2% of the reference exchange rate adopted for the valuation of the Contract.

(e) The impact of notified ERV shall be computed on a yearly basis for the outflow as mentioned by the Bidder in their bid and shall be paid / refunded before the end of the financial year based on certification by the Buyer.

(f) **METHODOLOGY FOR CLAIMING ERV:** Paying authority is to undertake a pre-audit of the documents before payment. Documentation for Claiming ERV. The following documents would need to be submitted in support of the claim on account of ERV:

(i) A bill of ERV claim enclosing worksheet.

(ii) Banker's Certificate/debit advice detailing Foreign Exchange paid and Exchange rate as on date of transaction.

(iii) Copies of import orders placed on the Seller.

(iv) Invoice of Seller for the relevant import orders.

25. INDIGENOUS CONTENT: NA

26. PRICE BENCHMARKING CLAUSE: The Seller shall agree that the prices finalized for the development phase of the items shall serve as the reference ceiling for determining the cost of subsequent serial production. The Seller shall guarantee that unless agreed otherwise in writing by the Buyer, the prices for serial production of the items, including any sub-assembly or components developed shall not exceed the development price on a per unit basis by more than the percentage to be decided during the price negotiation meeting. Any finalized escalation must be fully justified based on audited cost data and subject to negotiation and approval by the Buyer. In no event shall such escalation exceed the agreed percentage unless necessitated by Government directed changes or Force Majeure conditions. This clause shall

remain valid for the period of years as mutually agreed from the completion of acceptance of the items under consideration.

27. BUY-BACK: NA

28. FREE ISSUE MATERIAL: NA

29. TERMS OF DELIVERY:

(a) INDIGENOUS SELLER: The delivery of goods shall be on FOR (PILANI).

(b) FOREIGN BIDDERS :NA

30. TRANSPORTATION & TRANSIT INSURANCE: The equipment(s) / material(s) will be packed, loaded onto transportation vehicle(s) as per the classification of category & class of goods and transported to the designated site location. Necessary transportation & transit insurance to the destination shall be the responsibility of Seller.

31. PACKING AND MARKING INSTRUCTIONS: The Seller shall provide packing and preservation of the equipment and spares/goods contracted so as to ensure their safety against damage in the conditions of land, sea and air transportation, trans-shipment, storage and weather hazards during transportation, subject to proper cargo handling. The Seller shall ensure that the stores are packed in containers, which are made sufficiently strong. The packing cases should have provisions for lifting by crane/ fork lift truck. Tags with proper marking shall be fastened to the special equipment, which cannot be packed. The packing of the equipment and spares/goods shall conform to the requirements of specifications and standards in force in the territory of the Seller's country.

(a) Item Code and Item Description along with other technical details are to be engraved on all type of raw materials, as applicable, being delivered by the Suppliers.

(b) Items being delivered should be packed in good quality wood and transport worthy packing conditions for ease of handling and storage.

(c) One type of items should be packed in one box for ease of receipt, storage and issue.

32. QUALITY & INSPECTION CLAUSE:

(a) YEAR OF PRODUCTION: The items should be of the latest manufacture and conform to the current production standards. The equipment shall have a minimum residual service life of 15 years at the time of acceptance.

(b) QUALITY: The quality of the items shall correspond to the technical conditions and standards enumerated in the RFP.

(c) QUALITY ASSURANCE: The quality assurance procedure that will be applicable from the date of Order till completion of deliveries for items will be as per the applicable

Technical Documents to be defined in Technical Bid. The documents may be amended, if required, by mutual consent of the Buyer and the Seller.

(d) QA DOCUMENTATION:

(i) The Seller shall submit all the QA records mentioned in the QAP/TS Documents, Standard of Preparation (SoP) and Technical Drawings in digital form (DVD) along with each Item Specifications.

(ii) FOR VETTED & APPROVED QAP/TS DOCUMENT: Inspection at production/acceptance stage will be carried out as per QAP/ TS as outlined in **Appendix 'A'**.

OR

(iii) NEW QAP/TS DOCUMENT: The draft QAP/TS will be submitted to Buyer & Inspection Agency within 02 months from the date of the Order. Based on the suggestions/recommendations, the final copies will be made and put up for approval of Buyer & Inspection Agency.

(e) INSPECTION & ACCEPTANCE:

BY BUYER: Inspection at production/acceptance stage will be carried out by Buyer's representatives (Internal QC of **BrahMos Aerospace).** The Inspection Agency or their nominated agency shall have the right to conduct quality trials during the production/ acceptance of the items or at any later stage. Stores rejected will be collected and replaced by the Seller at his own cost.

(f) TESTING: Carrying out all the tests (including Destructive Testing) as specified in the Technical Specification/ ATP documents shall be the responsibility of the Seller.

33. WARRANTY: The Seller will declare that the goods, stores articles sold/ supplied shall be of the best quality and workmanship and new in all respects and shall be strictly in accordance with the specifications and particulars contained/ mentioned in the contract. The Seller will guarantee that the said goods/ stores/ articles would continue to conform to the description and quality as specified in **Appendix 'A'** .If the supplied goods are not giving satisfactory performance or have deteriorated, the Buyer shall be entitled to call upon the Seller to rectify the goods/ stores/ articles or such portion thereof as is found to be defective by the Buyer within a reasonable period without any financial implication to the Buyer. In cases of procurement of software, Seller shall issue/provide upgrades of the software free of cost during the warranty period.

34. PRODUCT SUPPORT: The Seller agrees to provide product support for the stores, assemblies/ subassemblies, fitment items, spares and consumables, Special Maintenance Tools (SMT)/Special Test Equipment (STE) for a minimum period of 15 years including two years of warranty period after the delivery. In the event of any obsolescence during the said period of product support in respect of any component or sub-system, mutual consultation between the Seller and Buyer will be undertaken to arrive at an acceptable solution including additional cost, if any.

35. ANNUAL MAINTENANCE CONTRACT (AMC): NA

36. TECHNICAL DOCUMENTATION: 02 Sets each of finalized Documents for each item/equipment in soft & hard copies will be provided along with the first item/equipment of each type.

37. TRAINING OF MANPOWER: Operator/ Maintenance level training for 02 batches/ groups comprising of 05 personnel each will be provided by the Seller after the installation of Air Blowing System and pipelines and final commissioning. The duration and syllabus of training will be mutually decided by the Buyer and Seller.

38. SUPPORT DURING JOINT RECEIPT INSPECTION (JRI): The Seller shall carry out periodic maintenance during warranty period as per maintenance schedule provided in user manual/driver's manual.

39. PROGRESS REVIEW COMMITTEE (PRC): The status/ progress of production and supply will be monitored by a PRC, consisting of specialists and representatives nominated by BrahMos Aerospace and Firm's representatives. The PRC will be constituted by the competent authority of the Buyer.

40. MODIFICATIONS (CHANGE IN SCOPE OF WORK), IF ANY:

(a) Should Buyer desire any modifications or improvements, additions or alterations to the design, drawings, specifications, place of delivery etc., the same shall be carried out by the firm.

(i) Without additional payments: If the modifications or improvements are of minor in nature and are intimated before undertaking of the job as per existing specifications has been carried out.

(ii) On payment of additional Expenses and extension of delivery schedule on mutual agreement, if modifications or improvements are major in nature.

(b) The recommendations of Committee / PRC will be considered as the basis for both Minor and Major modifications and for determining the requirements of additions/ reduction in expenditure and time for the contractor.

41. AMENDMENTS: No provision of the Contract shall be changed or modified in any way (including this provision) either in whole or in part except when both the parties are in written agreement for amending the Contract.

42. RISK AND EXPENSE PURCHASE: In case Seller fails to honor the contractual obligations within the stipulated delivery period and as amended, Buyer may procure the said contracted goods/services through a fresh supply order/contract and the defaulting Seller has to bear the excess cost incurred, if any.

PART-V: STANDARD TERMS & CONDITIONS OF RFP

(The terms & conditions will be amended or additional terms & conditions, if required, will be included in the RFP as decided by the competent authority)

The Bidder is required to give confirmation of their acceptance of the Standard Terms and Conditions of the RFP mentioned below which will automatically be considered as part of the Contract concluded with the successful Bidder as selected by the Buyer. Failure to do so may result in rejection of the Bid.

43. EFFECTIVE DATE OF THE CONTRACT: In case of placement of a supply order, the date of acceptance of the Supply Order would be deemed as the **Effective Date of Contract.** The firm should check the supply order and convey acceptance of the same within seven days of its receipt. If such an acceptance or communication conveying firm's objection to certain parts of the supply order is not received within the stipulated period, the supply order will be deemed to have been fully accepted by the firm. In case a contract is to be signed by both the parties, the Contract shall come into effect on the date of signatures of both the parties on the Contract (Effective Date) or as agreed during negotiations. The performance of the Contract shall commence from the Effective Date of the Contract/Supply Order.

44. LAW: The Contract shall be considered and made in accordance with the laws of the Republic of India and shall be governed by and interpreted in accordance with the laws of the Republic of India.

45. DISPUTES: All disputes or differences arising out of or in connection with the present Contract including the ones connected with the validity of the present contract or any part thereof, shall be settled by bilateral discussions. Both, Buyer and Seller, will make every effort to resolve the dispute if any, in a mutually acceptable manner.

46. ARBITRATION: In the event of any controversy, disputes or differences arising out of or in the interpretation of any of the terms and conditions of this agreement or on breach by any of the parties shall bring the said reason to the notice of each other, and shall amicably try to settle any such issues within 30 days of such notice. In the event of the parties' failure to reach amicable settlement as mentioned herein, all unresolved controversies, disputes or arbitration in accordance with Indian arbitration and conciliation Act, 1996.

47. PENALTY FOR USE OF UNDUE INFLUENCE: The Seller undertakes that he has not given, offered or promised to give, directly or indirectly, any gift, consideration, reward, commission, fees, brokerage or inducement to any person in service of the Buyer or otherwise in procuring the Contract or forbearing to do or for having done or forborne to do any act in relation to the obtaining or execution of the Contract or any other contract with the Government of India for showing or forbearing to show favor or disfavour to any person in relation to the Contract or any other contract with the Government of India. Any breach of the aforesaid undertaking by the Seller or anyone employed by him or acting on his behalf (whether with or without the knowledge of the Seller) or the commission of any offers by the Seller or anyone employed by him or acting on his behalf, as defined in Chapter IX of the Indian Penal Code, 1860 or the Prevention of Corruption Act, 1986 or any other Act enacted for the prevention of corruption shall entitle the Buyer to cancel the contract and all or any other contracts with the Seller and recover from the Seller the amount of any loss arising from such cancellation. A decision of the Buyer or his nominee to the effect that a breach of the undertaking had been committed

shall be final and binding on the Seller. Giving or offering of any gift, bribe or inducement or any attempt at any such act on behalf of the Seller towards any officer/ employee of the Buyer or to any other person in a position to influence any officer/ employee of the Buyer for showing any favor in relation to this or any other contract, shall render the Seller to such liability/ penalty as the Buyer may deem proper, including but not limited to termination of the contract, imposition of penal damages, forfeiture of the Bank Guarantee and refund of the amounts paid by the Buyer.

48. ACCESS TO BOOKS OF ACCOUNTS: In case it is found to the satisfaction of the Buyer that the Bidder/ Seller has violated the provisions of use of undue influence and/ or employment of agent to obtain the Contract, the Bidder/ Seller, on a specific request of the Buyer, shall provide necessary information/ inspection to the relevant financial documents/ information/ Books of Accounts.

49. AGENTS / AGENCY COMMISSION: The Seller confirms and declares to the Buyer that the Seller has not engaged any individual or firm, whether Indian or foreign whatsoever, to intercede, facilitate or in any way to recommend to the Government of India or any of its functionaries, whether officially or unofficially, to the award of the contract to the Seller; nor has any amount been paid, promised or intended to be paid to any such individual or firm in respect of any such intercession, facilitation or recommendation. The Seller agrees that if it is established at any time to the satisfaction of the Buyer that the present declaration is in any way incorrect or if at a later stage it is discovered by the Buyer that the Seller has engaged any such individual/firm, and paid or intended to pay any amount, gift, reward, fees, commission or consideration to such person, party, firm or institution, whether before or after the signing of this contract, the Seller will be liable to refund that amount to the Buyer. The Seller will also be debarred from entering into any contract with the Government of India for a minimum period of five years. The Buyer will also have a right to consider cancellation of the Contract either wholly or in part, without any entitlement or compensation to the Seller who shall in such an event be liable to refund all payments made by the Buyer in terms of the Contract along with interest at the rate of 2% per annum above (i) Prime Lending Rate of State Bank of India for Indian bidders, and (ii) London Inter Bank Offered Rate (LIBOR) for the foreign bidders. The applicable rates on the date of opening of tender shall be considered for this. The Buyer will also have the right to recover any such amount from any contracts in vogue with the Government of India.

50. WITHHOLDING OF PAYMENT: In the event of the Seller's failure to submit the Bonds, Guarantees and Documents, supply the stores/goods and conduct trials, installation of equipment, training, etc. as specified in the Contract, the Buyer may, at his discretion, withhold any payment until the completion of the Contract.

51. FORCE MAJEURE CLAUSE: Should any Force Majeure circumstances arise, each of the contracting party shall be excused for the non-fulfilment or for the delayed fulfilment of any of its contractual obligations, if the affected party within 30 (Thirty) days of its occurrence informs in a written form the other party. Force Majeure shall mean fires, floods, natural disasters or other acts, that are unanticipated or unforeseeable, and not brought about at the instance of, the party claiming to be affected by such event, or which, if anticipated or foreseeable, could not be avoided or provided for, and which has caused the non-performance or delay in performance, such as war, turmoil, strikes, sabotage, explosions, quarantine restriction beyond the control of either party. A party claiming Force Majeure shall exercise

reasonable diligence to seek to overcome the Force Majeure event and to mitigate the effects thereof on the performance of its obligations under this contract.

52. **LIQUIDATED DAMAGES:** The Buyer may deduct from the Seller, as agreed, liquidated damages at the rate of 0.5% per week/part thereof, of value basic cost (excluding taxes and duties on final product) of the delayed stores which the seller has failed to deliver within the period agreed for delivery in the contract subject to maximum of 10% of the total order value (excluding taxes and duties on final product). In cases where partial delivery does not help in achieving the objective of the contract, LD shall also be levied on the total cost (excluding taxes and duties on final product) of the ordered quantity delivered by the vendor. This will also include the store(s) supplied within the delivery period that could not be put to use due to late delivery subject to a maximum of 5% of the total order value (inclusive of taxes and duty) of the Contract.

53. **TERMINATION OF CONTRACT:** The Buyer shall have the right to terminate the Contract in part or in full in any of the following cases:

(a) The delivery of the store/service is delayed for causes not attributable to Force Majeure for more than 02 months after the scheduled date of delivery and the delivery period has not been extended by the Buyer.

(b) The delivery of store/service is delayed due to causes of Force Majeure by more than 06 months provided Force Majeure clause is included in the contract and the delivery period has not been extended by the Buyer.

(c) The Seller is declared bankrupt or becomes insolvent.

(d) The Buyer has noticed that the Seller has violated the provisions of Para 47 (Use of Undue Influence) and/or Para 49 (Employment of Agent) above to obtain the Contract.

(e) As per decision of the Arbitration Tribunal.

54. **NOTICES/ CORRESPONDENCES:** Any notice/correspondence required or permitted by the Contract shall be written in English language and may be delivered personally or may be sent by FAX/email or registered pre-paid mail/ airmail, addressed to the last known address of the party to whom it is sent.

55. **TRANSFER AND SUB-LETTING:** The Seller has no right to give, bargain, sell, assign or sublet or otherwise dispose of the Contract or any part thereof, as well as to give or to let a third party take benefit or advantage of the Contract or any part thereof without written consent of the Buyer.

56. **COMPETENCE OF PERSONNEL:** Bidder to ensure the following:

(a) Necessary Competence of personnel, who involving in the execution of work

(b) Their Contribution to product / service conformity & importance towards ethical behavior.

(c) Competence to detect or prevent the counterfeit parts, monitoring and reporting of the same during execution of contract.

57. CURRENT MANUFACTURE: The equipment supplied will be of latest manufacture and will confirm to current production standards including the specified material and its equivalent.

58. COUNTERFEIT PARTS:

(a) Seller shall evolve necessary verification and test methodologies to detect the counterfeit Parts.

(b) Seller to ensure to prevention of counterfeit parts / products including from their sub-vendors, if any.

(c) Seller to ensure that only non-counterfeit parts / products shall be delivered to Buyer.

(d) Further to prevent inadvertent use of counterfeit parts, Seller shall only procure directly from the OEM (Original Equipment Manufacturer) or their authorized distribution chain unless approved by Buyer in writing.

(e) Seller also to ensure the necessary traceability of parts / components belonging to OEM and the same shall be provided to Buyer to eliminate the delivery of counterfeit parts.

(f) Seller to obtain the approval of Buyer in writing to source the inputs from Non-Franchised Distributors and also to ensure parts that were procured are legitimate, authentic, non-counterfeit parts, if applicable.

(g) In case of detection of counterfeit parts / products upon inspection, same will not be accepted by Buyer and returned to Seller as they are and will be handled as per the policies of Buyer.

59. SECRECY: Any Information of classified nature obtained, acquired during the manufacture, test and trails is not to be passed on to any Third party by you or your subcontractor(s). This clause shall survive on termination or completion of this order.

60. USE OF PATENTS AND OTHER INDUSTRIAL PROPERTY RIGHTS: The prices stated in the Contract shall be deemed to include all amounts payable for the use of patents, copyrights, registered charges, trademarks and payments for any other Industrial Property Rights. The Seller shall indemnify the Buyer against all claims from a third party at any time on account of the infringement of any or all the rights mentioned in the previous paragraphs, whether such claims arise in respect of manufacture or use. The Seller shall be responsible for the completion of the supplies including spares, tools, technical literature and training aggregates irrespective of the fact of infringement of the supplies or any or all the rights mentioned above.

61. TAXES AND DUTIES:

(a) Bidders are required to indicate statutory taxes and duties correctly as per the price bid format and no column of taxes and duties has to be left blank. Rate (%) of taxes as applicable are to be filled up with '0' (Zero), 'positive numerical values' or 'Not applicable'

in the price bid as asked for in the RFP. If any column of taxes and duties as reflected in RFP is not applicable and intentionally left blank, the reason for the same has to be clearly indicated in the remarks column.

(b) Only GST will be paid extra by the Buyer. The Bidders are required to indicate the unit & total costs of the items/services with and without GST, GST % with HSN/SAC separately as per the format enclosed. GST claimed by the Seller shall be released by the Buyer only after it appears in the Buyer's GST Input Credit Register of GSTIN Online Portal.

62. DENIAL CLAUSE: Denial clause informs Seller that the Buyer reserves the right to admit additional payment due to upward revision of statutory levies beyond the original delivery schedule in case Seller fails to deliver the goods as per schedule. Variations in the rates of statutory levies within the original delivery schedule will be allowed if taxes are explicitly mentioned in the contract/supply order and delivery has not been made till the revision of the statutory levies. Buyer reserves the right not to reimburse the enhancement of cost due to increase in statutory levies beyond the original delivery period of the supply order/contract even if such extension is granted without imposition of LD.

63. UNDERTAKING FROM THE BIDDERS: Bidder/firm/company/vendor will submit an undertaking that in the past they have never been banned/debarred for doing business dealings with Ministry of Defence/Govt. of India/any other Govt. organization and that there is no enquiry going on by CBI/ED/any other Govt. agency against them.

64. DOCUMENTS TO BE FURNISHED FOR CLAIMING PAYMENT:

(a) INDIGENOUS SELLERS: The payment of bills will be made on submission of the following documents by the Seller to the Buyer:

(i) Ink-signed copy of Invoice.

(ii) Bank Guarantee for Advance, if applicable.

(iii) Performance Warranty Bond/ Indemnity Bond, if applicable.

(iv) Details for electronic payment viz. Bank name, Branch name and address, Account Number, IFS Code, MICR Number (if these details are not already incorporated in the Contract).

(v) Copy of the Contract and amendments thereon, if any.

(vi) Any other document/ certificate that may be provided for in the Contract.

(b) FOREIGN SELLERS (IF APPLICABLE) : In case of payment through Letter of Credit (LC), paid shipping documents are to be provided to the Bank by the Seller as a proof of dispatch of goods as per contractual terms /LC conditions so that the Seller gets payment from LC. The Bank will forward these documents to the Buyer for getting the goods/stores released from the Port/Airport. However, where the mode of payment is

DBT, the paid shipping documents are to be provided to the paying authority by the Buyer. Documents will include:

(i) Clean on-Board Airway Bill/Bill of Lading

(ii) Original Invoice

(iii) Packing List

(iv) Certificate of Origin from Seller's Chamber of Commerce, if any.

(v) Certificate of Quality and year of manufacture from OEM.

(vi) Dangerous Cargo Certificate, if applicable.

(vii) Insurance Policy of 110% value in case of CIF/ CIP contract.

(viii) Certificate of Conformity and Acceptance Test at PDI/FAT, if any.

(ix) Physio-sanitary/ Fumigation Certificate, if any.

(x) Performance Warranty Bond / Warranty Certificate.

(xi) Any other documents as provided for in the Contract.

65. FRANKING CLAUSE:

(a) **IN CASE OF ACCEPTANCE OF STORE(S):** The fact that the goods have been inspected after the delivery period and passed by the Inspecting Officer will not have the effect of keeping the contract alive. The goods are being passed without prejudice to the rights of the Buyer under the terms and conditions of the Contract.

(b) **IN CASE OF REJECTION OF STORE(S):** The fact that the goods have been inspected after the delivery period and rejected by the Inspecting Officer will not bind the Buyer in any manner. The goods are being rejected without prejudice to the rights of the Buyer under the terms and conditions of the contract.

66. CLAIMS:

(a) The quantity claims for deficiency of quantity and/ or the quality claims for defects or deficiencies in quality noticed during the inspection shall be presented within 45 days of completion of inspection.

(b) The Seller shall collect the defective or rejected goods from the location nominated by the Buyer and deliver the repaired or replaced goods at the same location, within mutually agreed period, under Seller's arrangement without any financial implication on the Buyer.

67. LIABILITY CLAUSE:

(a) Any damage caused to the property or suffered by the personnel of Buyer during the execution of Contract shall remain the liability of the Buyer. Such liability shall be fixed on Seller in case of grossly negligent act or omission on the part of Seller.

(b) This provision is limited to the relations between the Parties. It is without prejudice to the rights and actions to which the victims of damage, or any Social Security Organizations could prevail themselves legally.

(c) Either party would provide reasonable assistance to resolve the claim of other Party to mitigate loss or damage.

(d) Neither, the Seller shall be liable to the Buyer, nor shall the Buyer be liable to the Seller for any immaterial, punitive, indirect, special, incidental, or consequential loss or damage. This will hold good irrespective of whether such liability is based or claimed to be based on any breach of a Party's obligation under the Contract, or any negligent act or omission of a Party, its employees, servants, appointed representatives, sub-contractor or professional consultants, or such liability arises otherwise out of or in connection with the Contract.

(e) The Buyer shall not be liable for any compensation in any manner to the Seller for whatsoever reason.

(f) The Seller shall be liable to the Buyer for any compensation in any manner for whatsoever reasons for a sum not exceeding value of the Contract.

68. FALL CLAUSE: The prices charged for the stores supplied under the agreement by the Seller shall in no event exceed the lowest price at which the Seller sells the items of identical description to any other person/organization during the period till performance of all supply orders placed during the currency of the agreement is completed. If, at any time, during the said period, the Seller reduces the sale price of such stores or sells stores to any other person/organization at a price lower than the price chargeable under the agreement, he shall forthwith notify such reduction or sale to the authority which has concluded the RC/PA; and the price payable under the agreement for the stores supplied after the date of coming into force of such reduction or sale shall stand correspondingly reduced.

69. INCOTERMS FOR DELIVERY AND TRANSPORTATION (FOR FOREIGN BIDDERS ONLY): Unless otherwise specifically agreed to by the Buyer and the Seller and incorporated in the Contract, the applicable rules and regulations for transportation of goods from foreign countries will be as per the contemporary version of International Commercial Terms (INCOTERM 2010) evolved by International Chamber of Commerce, Paris.

70. NON-DISCLOSURE: The Bidding documents, including this RFP and all attached documents provided by Buyer, are and shall remain or become the property of Buyer. These are transmitted to the Bidders solely for the purpose of preparation and the submission of a proposal in accordance herewith. Bidders are to treat all information as strictly confidential and shall not use it for any purpose other than for preparation and submission of their proposal. The provisions of this Para shall also apply mutatis mutandis to Bids and all other documents submitted by the Bidders, and Buyer will not return to the Bidders any proposal, document or

any information provided along therewith (except unopened Commercial Bid as relevant). Information relating to the examination, clarification, evaluation and recommendation for the Bidders shall not be disclosed to any person who is not officially concerned with the process, or concerning the Bidding Process. Buyer will treat all information, submitted as part of the Bid, in confidence and will require all those who have access to such material to treat the same in confidence. Buyer may not divulge any such information unless it is directed to do so by any statutory entity that has the power under law to require its disclosure or is to enforce or assert any right or privilege of the statutory entity and/ or Buyer or as may be required by law or in connection with any legal process.

71. ACCESS TO CLASSIFIED DOCUMENTS/ SYSTEMS: The Seller will be allowed to access pertinent classified details/documentation in the interest of execution of task. Association of the Seller will be desirable for effective rectification of design defects, if any, during trials of systems/ sub-systems, being developed as part of the contract. In all such cases, the Seller and his employees, connected with the assigned task, will be subject to the provisions contained in the Indian Official Secrets Act and required to render certificate to that effect.

72. ACQUIRING MANUFACTURING DRAWINGS AND ASSOCIATED HARDWARE: The manufacturing drawings & other documents prepared shall be the property of the Buyer and will be handed over to Buyer whenever required. Further, these will also not be used by the Seller for any purpose other than stated in the contract, without the written consent of Buyer. All dies/ tools/die sets/ jigs/ fixtures/ molds fabricated under the contract which are charged separately will be returned to Buyer unless specified otherwise in the contract.

73. RETURN OF DOCUMENTS: Documents, specifications, drawings, CD in encrypted format issued to Seller or prepared by them are "RESTRICTED" in nature and property of Buyer. In the interest of National Security these will be returned in as issued condition without any duplication and / or photocopying. A certificate to the effect that required documents have been received in Buyer would be furnished by the Project Team. Any loss or damage to these documents shall be recovered from the Seller.

74. CONFIDENTIALITY OF INFORMATION: No party shall disclose any information to any 'Third Party' concerning the matters under this RFP generally. In particular, any information identified as 'Proprietary' in nature by the disclosing party shall be kept strictly confidential by the receiving party and shall not be disclosed to any third party without the prior written consent of the original disclosing party. This clause shall apply to the sub-contractors, consultants, advisors or the employees engaged by a party with equal force.

75. UNDERTAKING BY BIDDERS: The Bidder will submit an undertaking that they are currently not banned/ debarred / suspended from doing business dealings with Government of India / any other government organization and that there is no investigation going on by MoD against them. In case of ever having been banned / debarred / suspended from doing business dealings with MoD/any other government organization, in the past, the Bidder will furnish details of such ban / debarment along with copy of government letter under which this ban / debarment / suspension was lifted / revoked. The Bidder shall also declare that their sub-contractor(s)/Seller(s)/technology partner(s) are not Suspended or Debarred by Ministry of Defence. In case the sub-contractor(s)/Seller(s)/ technology partner(s) of the Bidder are Suspended or Debarred by Ministry of Defence, the Bidder shall indicate the same with justification for participation of such sub-contractor(s)/ Seller(s)/ technology partner(s) in the procurement case. Subsequent to submission of bids if any sub-contractor(s)/Seller(s)/

technology partner(s) of the Bidder is Suspended or Debarred by Ministry of Defence, the Bidder shall intimate the Ministry of Defence regarding Suspension or Debarment of its sub-contractor(s)/ Seller(s)/ technology partner(s) within two weeks of such order being made public.

76. GOVERNMENT REGULATIONS: It may be confirmed that there are no Government restrictions or limitations in the country of the Bidder or countries from which subcomponents are being procured and/or for the export of any part of the deliverables being supplied.

77. PATENT RIGHTS: The Bidder should confirm that there are no infringements of any Patent Rights in accordance with the laws prevailing in their respective countries.

78. RECORD OF QUALITY RELATED DOCUMENTS: To be maintained for a minimum period of 15 yrs.

79. AUDIT OF STORES: All products and records are subjected to audit by BrahMos Aerospace at any juncture during production at Seller's premises or after receipt at BrahMos Aerospace, Pilani.

BrahMos

An India Russia Joint Venture

BrahMos Aerospace
Post-Dulania, Pilani
District-Jhunjhunu
Rajasthan-333031, INDIA
Tele Fax: 01596-275803

PART-VI: FORMAT FOR PRICE BID

(The terms & conditions will be amended or additional terms & conditions, if required, will be included in the RFP as decided by the competent authority)

Sl. No.	Description	Qty.	Unit Cost	Total Cost	Rate of GST	Total Cost (incl. GST)	Remarks
A	Cost of **Basic Item/Service.** Full break-up details may be given.						
B	Cost of **Installation/ Commissioning/ Integration** (where applicable)						
C	Cost of Buyer Nominated Equipment (if applicable)						
D	Cost of **Transfer of Technology** (where applicable).						
E	Cost of **Manufacturer's Recommended List of Spares**						
F	Cost of **Special Maintenance Tools and Special Test Equipment**						
G	Cost of **Operator's Manual** and **Technical Literature** (in English Language) including ISPL						
H	Cost of **Training Aids** recommended by the Bidder						
I	Cost of recommended period of **Training**						
J	**Any other** cost (to be specified).						
K	**Freight and Transit Insurance** Cost (where applicable).						
L	**AMC/CMC** Cost giving year-wise break-up (where applicable).						
M	**Total Cost** (Total of Serial A to L)	# This will be used in determining L-1 Bidder					
N	**Foreign Exchange component** of the proposal (for Indian Bidders only)						

BrahMos
An India Russia Joint Venture

BrahMos Aerospace
Post-Dulania, Pilani
District-Jhunjhunu
Rajasthan-333031, INDIA
Tele Fax: 01596-275803

PART-VII: COMPLIANCE STATEMENT

COMPLIANCE STATEMENT			
Sl. No.	**Clause**	**RFP Requirement**	**Comments by Bidder**
	Part-I	**GENERAL INFORMATION AND INSTRUCTIONS**	
	Sl. No. of Clause as per RFP	Terms & Conditions as per RFP	Complied (Yes / No) If No, give details
	Part-II	**SCOPE OF WORK**	
	Sl. No. of Clause as per RFP	Terms & Conditions as per RFP	Complied (Yes / No) If No, give details
	PART-III	**EVALUATION CRITERIA OF BIDS**	
	Sl. No. of Clause as per RFP	Terms & Conditions as per RFP	Complied (Yes / No) If No, give details
	Part-IV	**SPECIAL TERMS & CONDITIONS**	
	Sl. No. of Clause as per RFP	Terms & Conditions as per RFP	Complied (Yes / No) If No, give details
	Part-V	**STANDARD TERMS & CONDITIONS**	
	Sl. No. of Clause as per RFP	Terms & Conditions as per RFP	Complied (Yes / No) If No, give details
	PART-VI	**PRICE BID FORMAT**	
	Sl. No. of Clause as per RFP	Terms & Conditions as per RFP	Complied (Yes / No) If No, give details

BrahMos Aerospace
Post-Dulania, Pilani
District-Jhunjhunu
Rajasthan-333031, INDIA
Tele Fax: 01596-275803

- **The Bidder shall submit a Clause-by-Clause Compliance Statement as per the above format. There should be no discrepancy between the details mentioned in the Techno-Commercial Bid and the Compliance Statement.**

- **In case of any such discrepancies, the terms & conditions mentioned in the RFP and their compliances as mentioned in either of the two documents shall prevail.**

Appendix-A

BM/P/LT/SOW/03

12th Nov, 2025

Scope of Work for Air Blowing System & installation of Permanent pipelines at BrahMos Aerospace, Pilani

I. Scope of work for Air blowing system: -

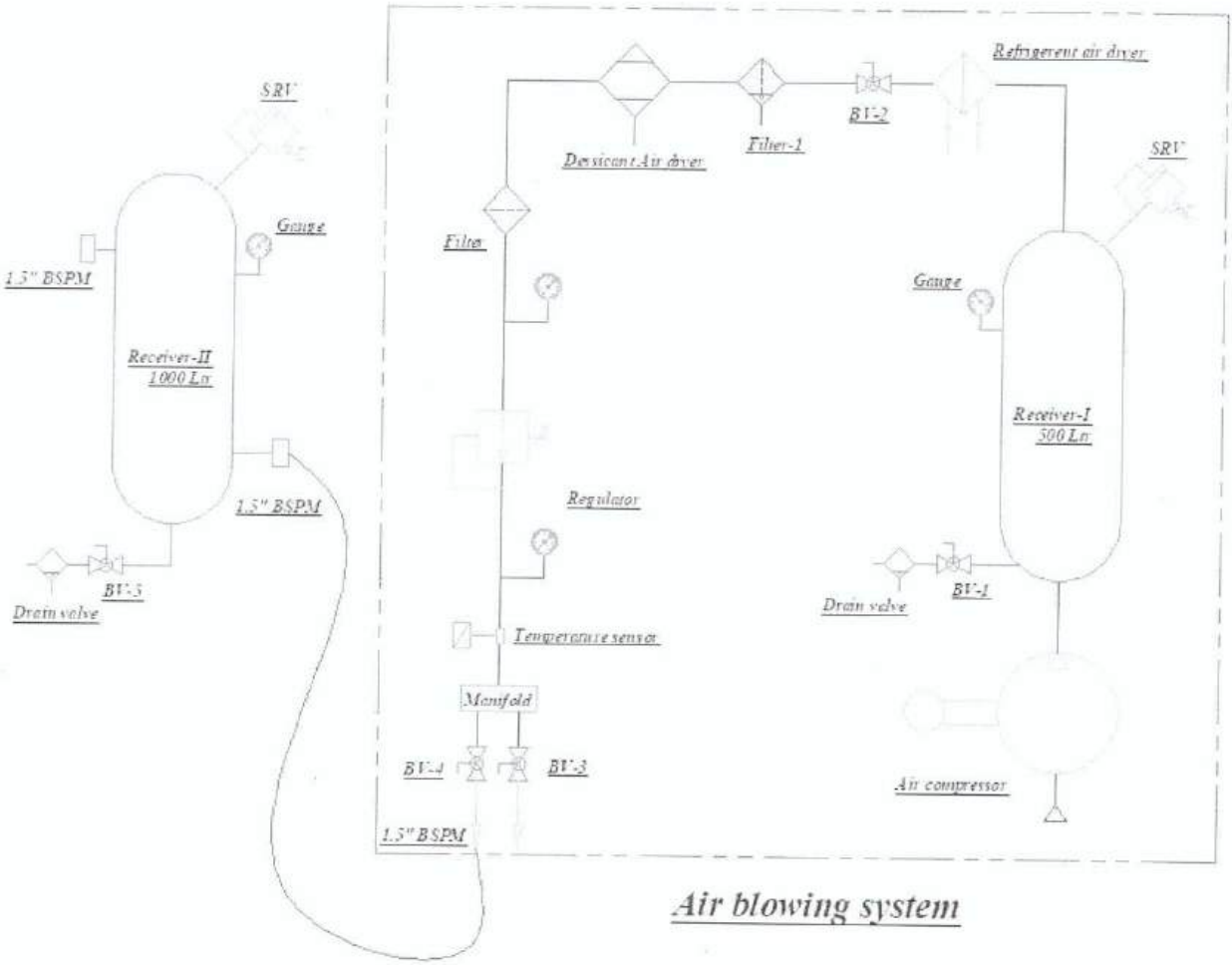

Fig: Schematic of Air blowing system

1. Scope of Supply

The vendor shall develop, manufacture, integrate, test. spare parts list for each sub-system and supply one portable air blowing system to BrahMos aerospace, Pilani. The system shall meet the technical parameters as specified in the technical specifications & QA plan. The vendor shall demonstrate the operation of Air Blowing

system in presence of BrahMos Aerospace representatives at BrahMos Aerospace, Pilani to confirm the parameters as given in technical specifications.

2. Technical specifications

1) The Air Blowing system shall supply air at the outlet with the following specifications:
   - Pressure : 0 to 2 Kgf/cm^2
   - Required flow rate : 250 kg/h @ 1kgf/cm^2
   - Minimum Atmospheric Dew Point of air at outlet : -60^{0}C to -80°C
   - Oil Quantity : Less than 0.01 mg/m^3
2) The vendor shall develop the Air Blowing system as per schematic shown in fig. It mainly comprises of the following sub systems:
   i. Compressor
   ii. Receiver (0.5 m^3 & 1.0 m^3)
   iii. Refrigerant type Air Dryer
   iv. Desiccant type Air Dryer with inlet and outlet filter
   v. Flow Regulator
   vi. Sensors
   vii. Pressure Gauges
   viii. Control Panel
   ix. Flexible Hoses
3) The subsystems shall have following technical specifications:

a) Compressor:

- The Compressor shall be single stage screw compressor driven by an electric motor.
- Make: Atlas Copco (Preferable model- **GA26+ VSD+)**
- Capacity: 150 cfm min. @ 7 Kgf/cm^2
- The Compressor shall provide with an integrated oil separator for limiting the oil content in the outlet air at less than 0.01 mg/m^3
- The outlet pressure of the compressor shall be order of 7 Kgf/cm^2 with a flow rate to meet the air delivery requirement
- AC (440V/ 3 phase) power is available to operate the compressor
- Working temperature shall also have an integrated air dryer to remove the moisture in compressed air. Pressure dew point of the outlet air shall be of the order of 4^{0}C. It shall also have an automatic condensate drain system
- The Compressor shall be provided with a control panel mounted in the front panel with alphanumeric display for controlling and operating the compressor and show the status, error or warning messages.

b) Receiver:

- The capacity of the vertically mounted receiver shall be 0.5 m^3 and designed for working pressure of 10 Kgf/cm^2
- The receiver shall be designed as per pressure vessel code IS:2825 class III/ ASME section VIII dev. 1. Proper certification for safe usage of the receiver shall be provided by the vendor at the time of supply.
- The receiver shall be equipped with an adjustable safety relief valve (Make: parker and Swagelok of SS class) set at a pressure of 7.7 Kgf/cm^2. The receiver shall also have a manual vent valve (ball valve made of stainless Steel) and

outside the trolley for easy operation. ½" BSP threaded connections shall be provided on the receiver.

- The receiver shall have a metallic plate(aluminium) with the following information inscribed on it:
  - ✓ Max. Working Pressure
  - ✓ Volume of Receiver
  - ✓ Test Pressure
  - ✓ Test Date
  - ✓ Manufactures Details
  - ✓ Material of Construction
  - ✓ Relief valve set pressure

c) Desiccant type Air Dryer

- Make: Trident
- Model: Dry spell 300 (Preferable)
- Capacity:200 cfm
- Dew Point at outlet: minimum -60°C ADP
- Working Pressure: 8 bar
- Quantity: 1nos.

d) Refrigerant type Air Dryer

- Make: Trident
- Model: CS-250 (Preferable)
- Capacity: 250 cfm
- Working Pressure: 8 bar
- Quantity: 1nos.

e) Flow Regulator

- Make: Tescom, USA
- Rated inlet pressure:34.5kgf/cm^2 (500psi)
- Outlet pressure range:0-3.45 Kgf/cm^2 (50psi)
- Flow capacity, Cv: 5 (depends on flow)
- Material of Construction: SS316

f) Transmitters:

The following Transmitters shall be provided with digital display to monitor the operation of the complete system:

i. Temperature Transmitters
   - Qty: 1 no.
   - Range: 0-50^{0}C
   - Make: WIKA / ACE INSTRUMENTS
   - Type: Insertion type to measure the temperature of flowing air

ii. Pressure Transmitters
   - Qty: 1 no.
   - Range: 0-10 Kgf/cm^2
   - Make: WIKA / ACE INSTRUMENTS
   - Accuracy: 0.5% FSD

g) Pressure Gauges

4" dial analogue pressure gauges shall be mounted on the control panel for measuring the pressure inside the receiver, inlet & outlet of the pressure regulators.

Make of the pressure gauges shall be WIKA with an accuracy of ±1% FSD with glycerine/silica gel filled. Pressure gauges shall have measuring range of 10 Kgf/cm^2.

h) Control Panel

i. The control panel of the Air blowing system shall have the following:
   - Power ON/OFF switch for
     - Complete system
     - Compressor
     - Air Dryers
   - Power Supply Light Indicator for
     - Complete system
     - Compressor
     - Air Dryers
     - Air Cooler
   - Emergency shut off button

ii. Control Panel shall be of Mild steel (stainless steel) with power coating of Blue colour.

iii. A suitable cover for the control panel with lock arrangement shall be provided

iv. Suitable electrical cable of 10 m length along with connector shall be provided.

i) Receiver:

- The capacity of the vertically mounted receiver shall be 1.0 m^3 and designed for working pressure of 10 Kgf/cm^2
- The receiver shall be designed as per pressure vessel code IS:2825 class III/ ASME section VIII dev. 1. Proper certification for safe usage of the receiver shall be provided by the vendor at the time of supply.
- The receiver shall be equipped with an adjustable safety relief valve (Make: parker and Swagelok of SS class) set at a pressure of 7.7 Kgf/cm^2. The receiver shall also have a manual vent valve (ball valve made of stainless Steel) and automatic drain valve at the bottom of the receiver. Vent valve shall be located outside the trolley for easy operation. ½" BSP threaded connections shall be provided on the receiver.
- The receiver shall have a metallic plate(aluminium) with the following information inscribed on it:
  - ✓ Max. Working Pressure
  - ✓ Volume of Receiver
  - ✓ Test Pressure
  - ✓ Test Date
  - ✓ Manufactures Details
  - ✓ Material of Construction
  - ✓ Relief valve set pressure

j) Flexible Hoses

Vendor shall provide flexible hoses with each blowing system having the following specifications for interconnection of the Air blowing system with the article:

- Hose type I(Qty:1)

- Material: SS braided insulated flexible hose
- Length: 10 m x 1 no.
- End fittings: 1.5" BSP female swivel nut on both sides
- Working Pressure: 10 Kgf/cm^2

4) The entire system shall be mounted on a mobile trolley (without prime mover)
5) The trolley should have movable towing hook/handle for movement. The trolley shall have suitable suspension system and 4 nos. of tubeless rubber tyres.

Enclosure for Air blowing system

6) A weather protection cover shall be provided around the blowing system. The silver grey colour powder coated protection cover shall be made of 0.5mm thick sheets of mild steel stainless steel covering the total system from top & four sided to protect it from rain and sunlight. The sheets on each side (except top) shall have the opening /closing with locking arrangement (similar to two flap door system) to facilities maintenance & operation of the system.
7) Routing of all the pipelines shall be neat & proper. The material of piping shall be SS316 for a working pressure of 7 Kgf/cm^2 minimum.
8) Circuit layout of the system on a metallic plate shall be fixed on the control panel.
9) Vendor shall also supply 10 m three phase standard cable with plug to connect the system with power supply.
10) Pipeline from the outlet of the refrigerant air dryer shall be insulated to minimise heat gain from surroundings during operation.
11) Suitable duct arrangement for air inlet to the compressor shall be provided in the trolley. The ducting shall prevent dust/ rain entering inside the compressor.

3. QA Plan for Air Blowing System

1) The vendor shall submit the design document along with all drawings of system to obtain the clearance for manufacturing from BrahMos Aerospace, Pilani.
2) The design document & drawing submitted by the vendor shall be the property of BrahMos Aerospace, Pilani.
3) Modifications/ Alteration/Suggestion for the system may be given after submission of the design & drawings to BrahMos Aerospace and vendor shall accept the same.
4) Inspection of the total system shall be carried out at various levels of manufacturing / testing by BrahMos Aerospace. The inspection stages will be defined by BrahMos aerospace and to be accepted by vendor.
5) Acceptance test plan (ATP) shall be evolved jointly with vendor within one month after placement of supply order.
6) The vendor shall provide performance guarantee for the system for a period of 12 months from the date of acceptance at BrahMos Aerospace.
7) The following certificates shall be provided along with:
   I. Compressor:
      - Manufacture's Certificate
      - Performance characteristics in terms of
        - Maximum pressure Capacity
        - Nominal working pressure capacity
        - Flow rate capacity
        - Pressure dew point of air at compressor outlet
        - Residual oil content in outlet air
      - Warranty/ Guarantee certificate for 12 months(minimum).
      - Original manufactures operation manual/Instruction book for operation & maintenance.

   II. Receiver:
      - Manufacture's certificate
      - Test Certificates
        - RDP test as per IS 3658 for weld joints
        - Hydraulic test at 1.5 times the working pressure
        - Safety relief valve certificate.
        - Material chemical composition test report & mechanical properties certificate.

   III. Air Dryers (Refrigerant & Desiccant):
      - The vendor shall provide certificates of following-
        - The Performance characteristics for refrigerant and molecular sieve from manufacturer
        - Minimum working pressure capacity of 7 Kgf/cm^2
        - Flow rate capacity
        - Dew point temperature & residual oil in outlet air
        - Manufacturers certificates for filters
        - The Air Dryers shall be airtight at pressure of 7 Kgf/cm^2. The leak test shall be carried out by soap solution method at P_{test}= 7

Kgf/cm^2 as per SAE J2384.No bubble & pressure drop is allowed.

IV. Pressure Regulator

- Manufacturers certificates for performance parameters in terms of
  - Inlet pressure rating
  - Flow Characteristics
  - Warranty / Guarantee certificate for 12 months
  - Original manufactures operational manual

V. Sensors

- Manufacturers certificates
- Calibration certificate
- Warranty / Guarantee certificate for 12 months
- Original manufactures operational manual

VI. Flexible Hoses

- Hydraulic pressure test report for twice the working pressure limit
- Material Certificate.

8) The welding of receiver & piping shall be carried out by qualified welder as per standards BN EN 287 part-1, 1992.approval testing welders for fusion welding. Weld joint shall be TIG welded and cleaned after confirmation of
   - Visual Inspection
   - RDP test as per IS 3658

4. Documents:

The vendor has to submit the following documents for below mentioned components

- Compressor
- Refrigerant dryer
- Desiccant dryer
- Electric sub systems
- Filter

Documents required

- BOM of all items with details like Make / part number for each sub items
- Overall schematic diagram
- List of all spare parts including make, model number & part number.
- List of consumables.
- Service requirements like Consumable replacement and time of service
- List of common breakdowns and remedies
- Filter element part number.

5. Outlet conditions of Air blowing system:

Regulator outlet Pressure	:	**0 to 3.0 Kgf/cm^2**
Flow rate	:	**250 kg/h @ 1kgf/cm^2**
Minimum Atmospheric Dew Point of air at outlet	:	**-60^{0}C to -80°C**
Oil Quantity	:	**Less than 0.01 mg/m^3**
Mechanical admixtures (filtration purity)	:	**Less than 5.0 microns**

List of Deliverables for Air blowing system

Sl. No.	Description	Qty.
1.	Air blowing system as per Schematic	01
2.	Compressor spare parts ➢ Oil ➢ Oil separator ➢ Oil filter ➢ Inlet filter ➢ Any other replaceable items	03 sets
3.	Auto drain valve for receiver	02 sets
4.	Pressure gauge for Receiver (0-10 Kgf/cm^2)	02 sets for spare
5.	Ball Valve, 1.5 inch BSP(F) end fitting	02 Spare
6.	Spare parts for refrigerant dryer	01 set
7.	Spare parts for desiccant dryer	01 set
8.	Filter elements for Line filter-1 5 microns	06 no's for spare
9.	Filter elements for Line filter-2 0.01 microns	06 no's for spare
10.	Pressure Regulator with 1.5 inch BSP (F) end fittings	01
11.	SS Braided stainless steel flexible hoses 1.5 Inch, Length: 05m	02 + 02 spare

II. Scope of work for installation of Permanent Pipelines: -

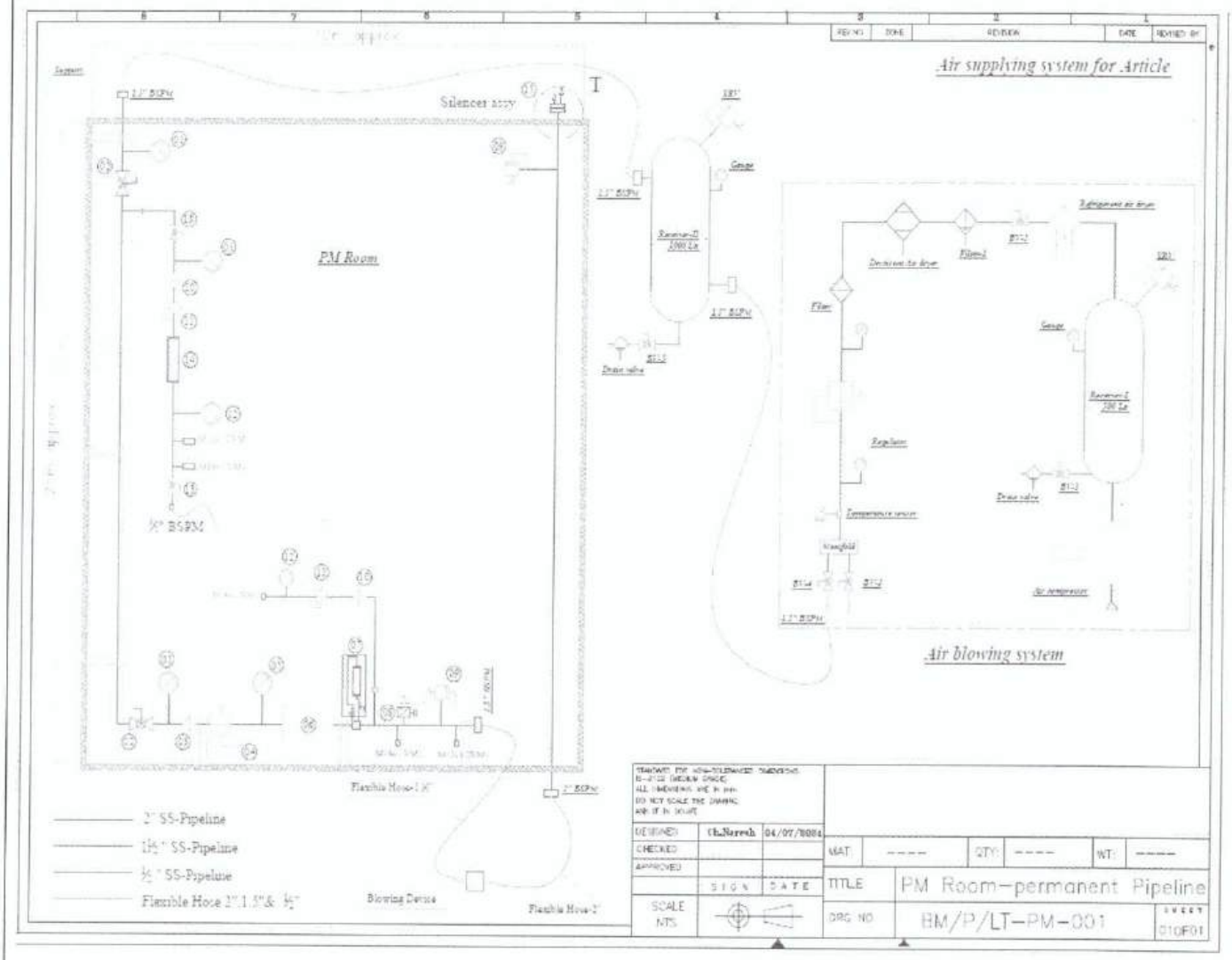

Refer Drawing BM/P/LT-PM-001

1. **Scope of Supply:**

The vendor shall manufacture, supply and install permanent pipelines along with the necessary fittings, accessory items as given in this scope of work and also carry out the necessary civil works like making entrance in building wall for pipes and re-plastering of walls etc. for the installation of the pipelines. The system of pipelines shall meet all the technical parameters as specified in the technical specification and QA plan.

The vendor shall also provide the complete set of documents, calibration certificates and manufacturer's certificates of the accessory items and pipelines, flexible hoses.

2. Technical Specification:

2.1. Pipelines:

a. Material of Construction: SS 304L as per ASTM 312 (Shedule-40)
b. Make: SAIL/TATA/Jindal Steel
c. Internal diameters:

As shown in the schematic, the pipelines of following diameters are required-

- I.D. 2 inch, W.P.-10 bar.
- I.D. 1.5 inch, W.P.-10.0 bar.
- I.D. 0.5 inch, W.P.-10.0 bar.

2.2. Pressure Gauges:

The vendor has to provide and install pressure gauges of the following specifications as shown in the schematic:

a) Material of construction: SS 316L
b) Dial Size: 4 inch
c) Accuracy: ± 0.5% of FSD
d) Make: WIKA
e) End connection: ½" BSP
f) Ranges: 0 to 10.0 Kgf/cm^2 – 03 nos
g) Ranges: 0 to 5.0 Kgf/cm^2 – 01 nos
h) Ranges: 0 to 3.0 Kgf/cm^2 – 02 nos

2.3. Rotameter:

The vendor has to provide and install rotameter along with associated fittings of the following specifications as shown in the schematic:

a) MOC: Stainless steel –Acrylic body (outer body)
b) Working pressure: 7 Kgf/cm^2
c) Ranges:
   - 0-250 kg/hr, type: bypass carrier ring type rotameter, Qty: 1
   - 0-100 kg/hr, type: inline rotameter, Qty: 1

2.3. Flexible Hoses:

Vendor shall provide flexible hoses with each blowing system having the following specifications for interconnection of the air blowing system with the article:

- Hose type-1:
  - Material: SS Braided stainless steel flexible hoses
  - I.D.: 1.5 inch
  - Length: a) 10 m - 2 no.
    b) 5m -2 nos. (with additional foam thermal insulation)
    c) 5m - 2 nos.
  - End fittings: 1.5-inch BSP SS female swivel nut on both sides
  - Working pressure: 7 Kgf/cm^2
- Hose type-2:

- Material: Non Toxic PVC with SS wire impregnation
- I.D.: 2 inch
- Length: 10 m
- Qty - 2 nos.
- End fittings: 2 inch BSP SS female swivel nut on both sides
- Working pressure: 5 Kgf/cm^2
- Make: Phoenix Thunder hose

- Hose type-3:
  - Material: Non Toxic PVC with SS wire impregnation
  - I.D.: 0.5 inch
  - Length: 10 m
  - Qty - 2 nos.
  - End fittings: 0.5 inch BSP SS female swivel nut on both sides
  - Working pressure: 5 Kgf/cm^2
  - Make: Phoenix Thunder hose or equivalent (Poly hose India/ Gates India)

Vendor shall supply Hermitically sealed stoppers for each hosepipe.

2.4. Valves:

- **Ball Valves:**
  - Working Pressure: 12.0 Kgf/cm^2
  - MOC: Stainless Steel
  - Make: L&T/Zoloto/Tiger
  - End fittings : 1.5 inch BSP (F) on both sides - 02 No.
    : 0.5 inch BSP (F) on both sides - 02 No.

2.5. Pressure Regulators: -

Vendor has to provide and install the valves of the following specification as shown in the schematic:

- **Pressure Regulator (PR-1):**
  - Maximum pressure at inlet: 21 Kgf/cm^2
  - Maximum pressure at outlet: 7 Kgf/cm^2
  - Flow rate: minimum 250 kg/hr
  - Qty: 01 No.
  - End fittings: 1.5 inch BSP (female) on both sides
  - Make: Festo or Equivalent – Locking type

- **Pressure Regulator (PR-2):**
  - Maximum pressure at inlet: 21 Kgf/cm^2
  - Maximum pressure at outlet: 7 Kgf/cm^2
  - Flow rate: minimum 200 kg/hr
  - Qty: 02 No.

- End fittings: 0.5 inch BSP (female) on both sides
- Make: Festo or Equivalent – Locking type (Prefferable-LRS-D-7-MIDI)

2.6. Pneumatic Filters:

Vendor has to procure and install pneumatic filters of following specification as shown in the schematic:

- Make : FESTO or Trident
- Flow Rate : 250 kg/hr
- Filter element size and end fitting:

PF5: 5 microns, 1.5 inch BSP (F) on both sides, Qty:01 no

PF6: 5 microns, 0.5 inch BSP (F) on both sides, Qty:02 no's

2.7. Silencers (Qty-4 no's):

Vendor has to procure silencers as per the following specifications:

Type: Sintered metal

End connection: 0.5 inch BSP

Qty: 4 nos.

0.5 Inch Ball Valve and Nipple

The vendor has to fabricate adapter (2 nos.) for fixing two silencers as shown in the drawing BM/P/LT/JF/57. The adapter shall be fixed at the outlet of 2 inch BSP SS pipe as shown in schematic BM/P/LT/PM-00.001.

2.8. Safety Relief Valve:

Vendor has to procure and install a safety relief valve of following specification as shown in the schematic:

- Make : Swagelok Parker or Equivalent
- Mounting connection : 1.5" BSP
- Material : SS-304 or SS-316L
- Set pressure : 1.5 Kgf/cm^2
- Qty. : 02 No.

2.9. Temperature Sensor with display:

Vendor has to procure and install a temperature sensor with display of the following type as shown in the schematic:

- Make : Ace or Equivalent
- Type : Insertion type to measure the temperature of flowing air
- Range : 0-70 °C
- Accuracy : ±1°C
- Qty : 02 No.
- Temp. Sensor to be installed in the 1.5 Inch line as shown in the schematic and necessary adapter to be provided.

2.10. Air Chiller cum Heating System:

The vendor has to supply and install an air cooling cum Heating system of following specification as shown in the schematic:

- Make : Sanpar/Snow cool
- Flow rate : 250 kg/hr
- Minimum Pressure rating of all internal components : 7 Kgf/cm^2
- Outlet air dew point

For Cooling mode: -

- Temperature of air at inlet: 40-45°C
- Pressure at the inlet of the chiller: 1-2 Kgf/cm^2
- The chiller should be Refrigerant type chiller. Water cooled chiller is **not acceptable**.
- Temperature of air required at the outlet of the chiller should be 15±2°C
- The chiller shall have control to set the outlet air temperature from 10 to 20 °C.

For Heating mode: -

- Temperature of air at inlet: 5 to 15°C
- Pressure at the outlet of the Heater: 1-2 Kgf/cm^2
- The Heater should be Refrigerant type or coil type heating (Vendor should provide any other type of heater without altering the dew point of inlet air). Water circulation type heater is **not acceptable**.
- Temperature of air required at the outlet of the Heater should be 30 ± 5°C
- The Heater shall have control to set the outlet air temperature from 25 to 45°C.
- A control panel shall be provided to control the power supply, temperature and pressure. Following items shall be provided on the control panel:
    - Lamp indicator for power
    - Control On/off switch
    - Emergency shut off switch
    - Temperature controller
    - Digital display for inlet and outlet temperature
- All the internal piping of the chiller shall be of **stainless steel**.
- Make: As per vendor Convenience (Preferable make – Sanpar/Snow cool).

2.11. The routing of all the pipelines shall be neat and proper.

2.12. All the associated fittings, flanges etc. required for the installation of the network of pipelines shall be of stainless steel (SS304/SS316) and has to be catered by the vendor.

2.13. Any decision for changes to the drawings and technical specification, if any, will be taken on a case to case basis by BrahMos.

2.14. Vendor shall supply respected hermitically sealed stopper for each hose pipe and Pipeline end fittings

3. QA Plan:

3.1. Acceptance Tests: The System of pipelines will be accepted only after successful completion of the following tests. The tests are in the scope of the vendor.

3.1.1. Weld Tests:

All the weld joints shall be TIG welded and shall be subjected to the following:

- Visual Inspection
- Dye Penetrant test as per IS 3658

Reports have to be submitted by the vendor for the above tests.

3.1.2. Pressure test:

All the pipelines along with all the rotameters have to be pneumatically tested at a pressure of 10 bar after completion of installation of the system at BrahMos to check for leakages. All the joints shall be checked for leakages with snoop solution (soap solution). No leakage is allowed.

Report has to be submitted by the vendor for the above test.

3.1.3. After commissioning of system, continuously run it for 4-6 hours to meet the requirements.

3.2. Certification:

The vendor has to submit the following certificates:

a) Pipelines:

- Manufacturer's Certificate clearly specifying the following details:
  a) Material of Construction
  b) Maximum Pressure Rating
  c) Safe working pressure
- Material chemical composition test report and mechanical properties certificate

b) Pressure Gauges:

- Manufacturer's Certificate clearly specifying the following details:
  a) Material of Construction
  b) Range
  c) Accuracy
- NABL Calibration Certificate also has to be given for the gauges.
- Warranty Certificate.

c) Rotameter:

- Manufacturer's Certificate clearly specifying the following details:
  a) Material of Construction
  b) Range
- Hydraulic Test Report and NABL Calibration Certificate also has to be given.
- Warranty Certificate

d) Flexible Hoses:

- Manufacturer's Certificate specifying the following details:
  a) Material of Construction
  b) Pressure Rating
- Hydraulic Pressure Test Report for twice the working pressure has to be submitted by the vendor.
- Warranty Certificate

e) Ball Valves:

- Manufacturer's Certificate for performance parameters in terms of
  a) Pressure Rating
  b) Material of Construction
  c) Type of Seal
- Warranty Certificate

f) Pneumatic Filters:

- Manufacturer's Certificate for performance parameters in terms of
  a) Pressure Rating
  b) Material of Construction
  c) Size of filter element and part number
- Warranty Certificate

g) Temperature Sensor:

- Manufacturer's Certificate specifying the following:
  a) Range
  b) Accuracy
  c) Type
  d) Pressure Rating
- Calibration Certificate
- Warranty Certificate
- Original manufacturer's operational manual

h) Safety Relief Valve:

- Manufacturer's Certificate for performance parameters in terms of
  a) Pressure Rating
  b) Material of Construction
- Warranty Certificate

i) Chiller cum Heater:

- Manufacturer's Certificate for:
  a) Working Pressure Capacity of 7 Kgf/cm^2
  b) Air flow rate
  c) Refrigeration capacity
  d) Warranty/Guarantee Certificate for 12 months
  e) Original manufacturer's operational manual/instruction book for operation and maintenance

3.3. The welding of the receiver and piping shall be carried out by qualified welder as per standard BS EN 287 Part-1,1992: Approval Testing of welders for Fusion welding.

4. **Documents:**

The vendor has to submit the following documents for Heating cum chiller

- BOM of all items with details like Make / part number for each sub items
- Overall schematic diagram
- List of spare parts and consumable
- Service requirements like Consumable replacement and time of service
- List of common breakdowns and remedies

5. **Painting:**

All piping and air receiver furnished under this work shall be properly painted with two coats of a synthetic enamel paint over a coat of primer after installation as per IS Code. Colour code of the piping shall be **Sky Blue**.

6. **Warranty:**

The vendor shall guarantee the material and workmanship of the entire system for a period of 12 months from the date of commissioning. The guarantee/test certificates of equipment from suppliers shall be handed over to BrahMos.

List of Deliverables

Sl. No.	Description	Qty.
1.	Pressure gauges (0-10 Kgf/cm^2)	03
2.	Ball Valve, 1.5 inch BSP(F) end fitting	02 + 02 Spare
3.	Pneumatic Filter-1: 5 microns, 1.5 inch BSP (F) on both sides	01 + 02 Filter Element Spare
4.	Pressure Regulator with 1.5 inch BSP (F) end fittings	01
5.	Pressure gauges (0-5.0 Kgf/cm^2)	01 + 01 spare
6.	Air Chilling & Heating System (Refrigerant type)	01
7.	Rotameter with associated fitting and two ball valves (By-Pass Carrier Ring type)	01 + 01 Spare
8.	Temperature sensor with display	01 + 01 Spare
9.	Safety Relief Valve (set pressure 1.5 Kgf/cm^2)	02
10.	Pneumatic Filter-2: 5 microns, 0.5 inch BSP (F) on both sides	02 + 02 filter Element Spare
11.	Pressure Regulator with 0.5 inch BSP (F) end fittings (Festo-LRS-D-7-MIDI)	02
12.	Pressure gauges (0-2.5 Kgf/cm^2)	02
13.	Ball Valve, 0.5 inch BSP(F) end fitting.	02 + 02 Spare
14.	Rotameter with associated fitting 0.5 Inch BSP (In-Line type)	01 + 01 spare
15.	SS Braided stainless steel flexible hoses 1.5 Inch, Length: 10m	04
	SS Braided stainless steel flexible hoses 1.5 Inch, Length: 05m	04
	SS Braided stainless steel flexible hoses 1.5 Inch, Length: 05m (with additional foam thermal insulation)	04
16.	Non Toxic PVC with SS wire impregnation flexible hose 2.0 Inch, Length: 10m	02
17.	Non Toxic PVC with SS wire impregnation flexible hose 0.5 Inch, Length: 10m	03

18.	Silencer Adapter as per Drg. BM/P/LT/JF/57	01 set + 04 silencer spare
19.	Stainless Steel Pipelines, I.D. 2.0 inch	As required (35 m-approx.)
20.	Stainless steel Pipelines , I.D. 1.5 inch	As required (35m-approx)
21.	Stainless Steel Pipelines , I.D. 0.5 inch	As required (10m-approx)
22.	Supply and installation of permanent pipelines with the accessory items, Flanges and fittings as per schematic BM/P/LT/PM-001 at BrahMos Aerospace, Pilani	01

REV.NO.	ZONE	REVISION	DATE	REVISED BY

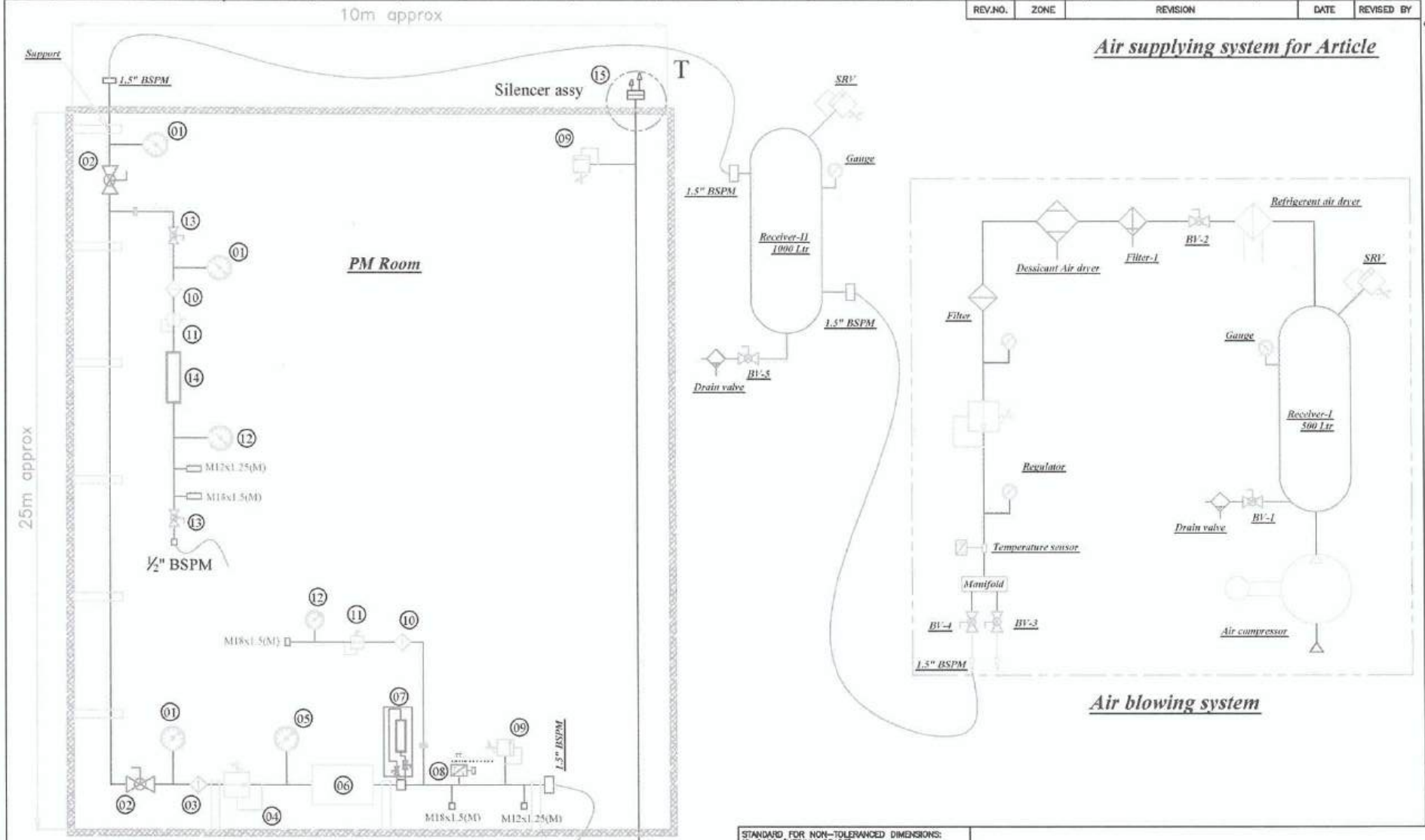

STANDARD FOR NON-TOLERANCED DIMENSIONS: IS-2102 (MEDIUM GRADE)
ALL DIMENSIONS ARE IN mm.
DO NOT SCALE THE DRAWING.
ASK IF IN DOUBT.

DESIGNED	Ch.Naresh	04/07/2024
CHECKED		
APPROVED		
	SIGN	DATE

SCALE NTS

MAT:	----	QTY:	----	WT:	----
TITLE	PM Room-permanent Pipeline				
DRG NO.	BM/P/LT-PM-001			SHEET	01OF01

Computer File Name

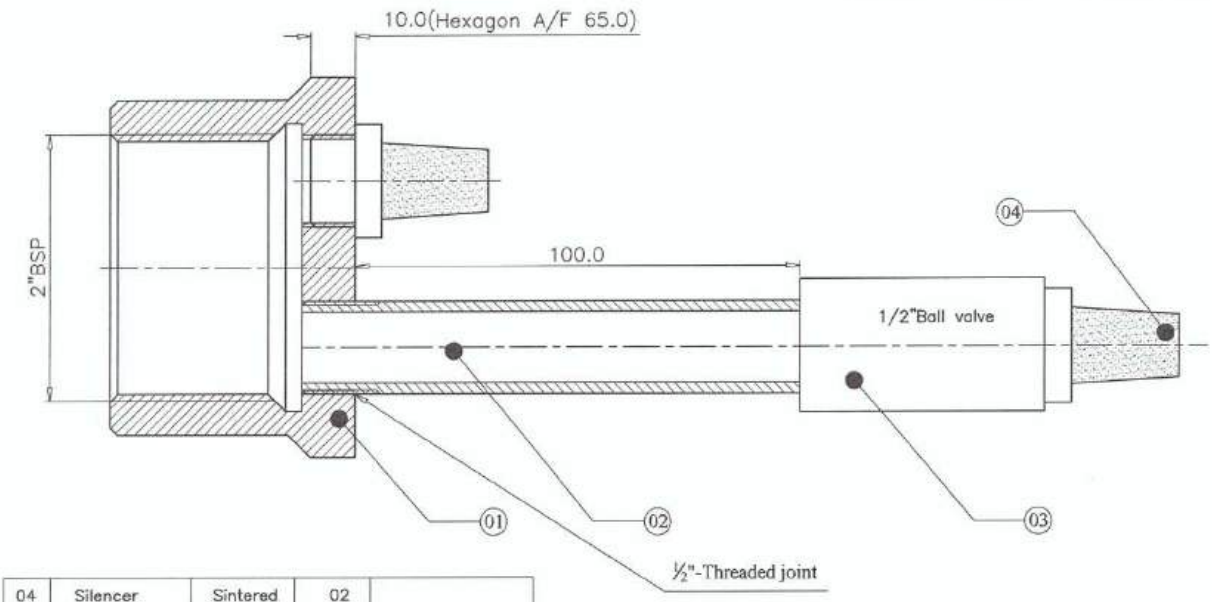

P.NO.	DESCRIPTION	MATERIAL	QTY	REMARKS
04	Silencer	Sintered	02	
03	1/2"Ball valve	SS	01	Swagelok/Panam
02	1/2" Pipeline	SS-304	01	
01	2" Adopter	SS-304	01	

REV.NO.	ZONE	REVISION	DATE	REVISED BY

STANDARD FOR NON-TOLERANCED DIMENSIONS: IS-2102 (MEDIUM GRADE)
ALL DIMENSIONS ARE IN mm.
DO NOT SCALE THE DRAWING.
ASK IF IN DOUBT.

		SIGN	DATE
DESIGNED	Naresh		
CHECKED			
DRAWN			
CHECKED			
APPROVED			

SCALE NTS

CUST./REF. ----

MAT: --- QTY: --- WT: ----

TITLE Silencer assy

DRG NO. BM/P/LT/JF/57

SHEET

Computer File Name